# 25 219 001 **EUROSMART COSMOPOLITAN PERFECT SHOWER SET WITH TEMPESTA 210**

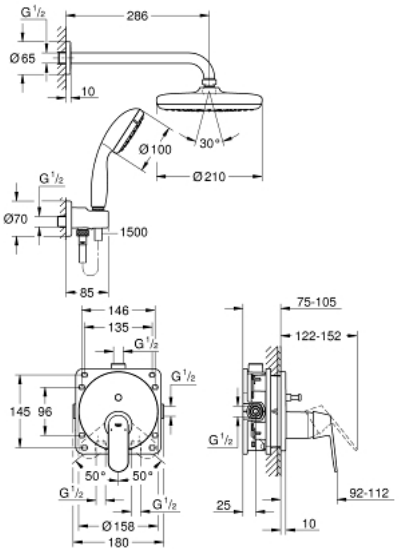


**PRODUCT DESCRIPTION**

- Colour: chrome
- consisting of:
- Eurosmart Cosmopolitan set for final installation with automatic diverter bath / shower (24 045)
- GROHE Rapido SmartBox universal rough-in box, 1/2" (35 600)
- head shower Tempesta 210 9.5 l/min (26 410)
- shower arm Rainshower 286 mm (28 576)
- hand shower Tempesta 100 II 9.5 l/min (27 597)
- shower outlet elbow (28 628)
- Rotaflex shower hose 1500 mm 1/2" x 1/2" (28 409)